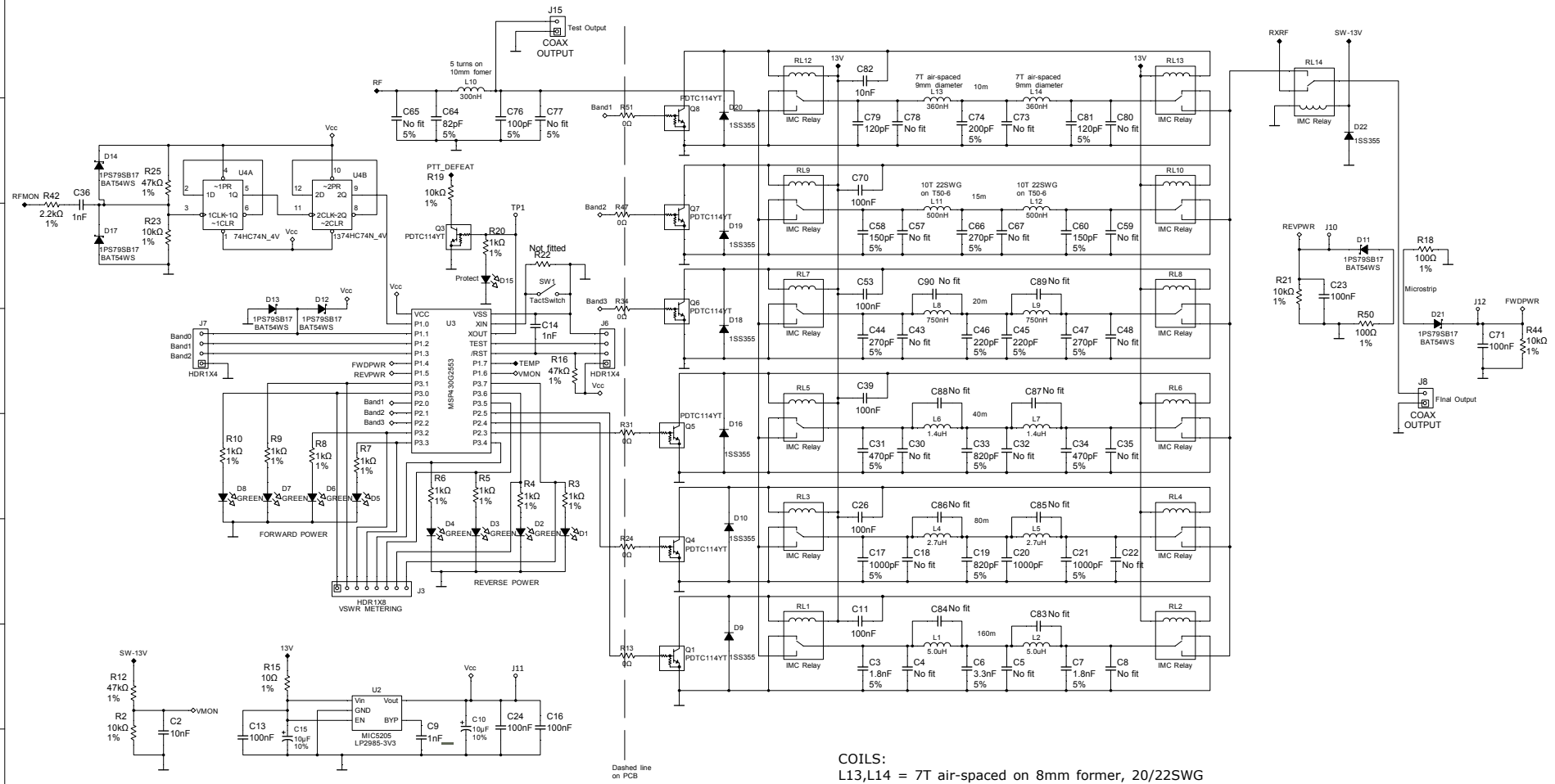

COILS:
L13,L14 = 7T air-spaced on 8mm former, 20/22SWG

TOROIDS:
L11,L12 = 11T 22 swg on T50-6
L8,L9 = 13T 22 swg on T50-6
L6,L7 = 18T 22 swg on T50-6
L4,L5 = 22T 22 swg on T50-2
L1,L2 = 29T 22 swg on T68-2

M0RZF 21/03/2017