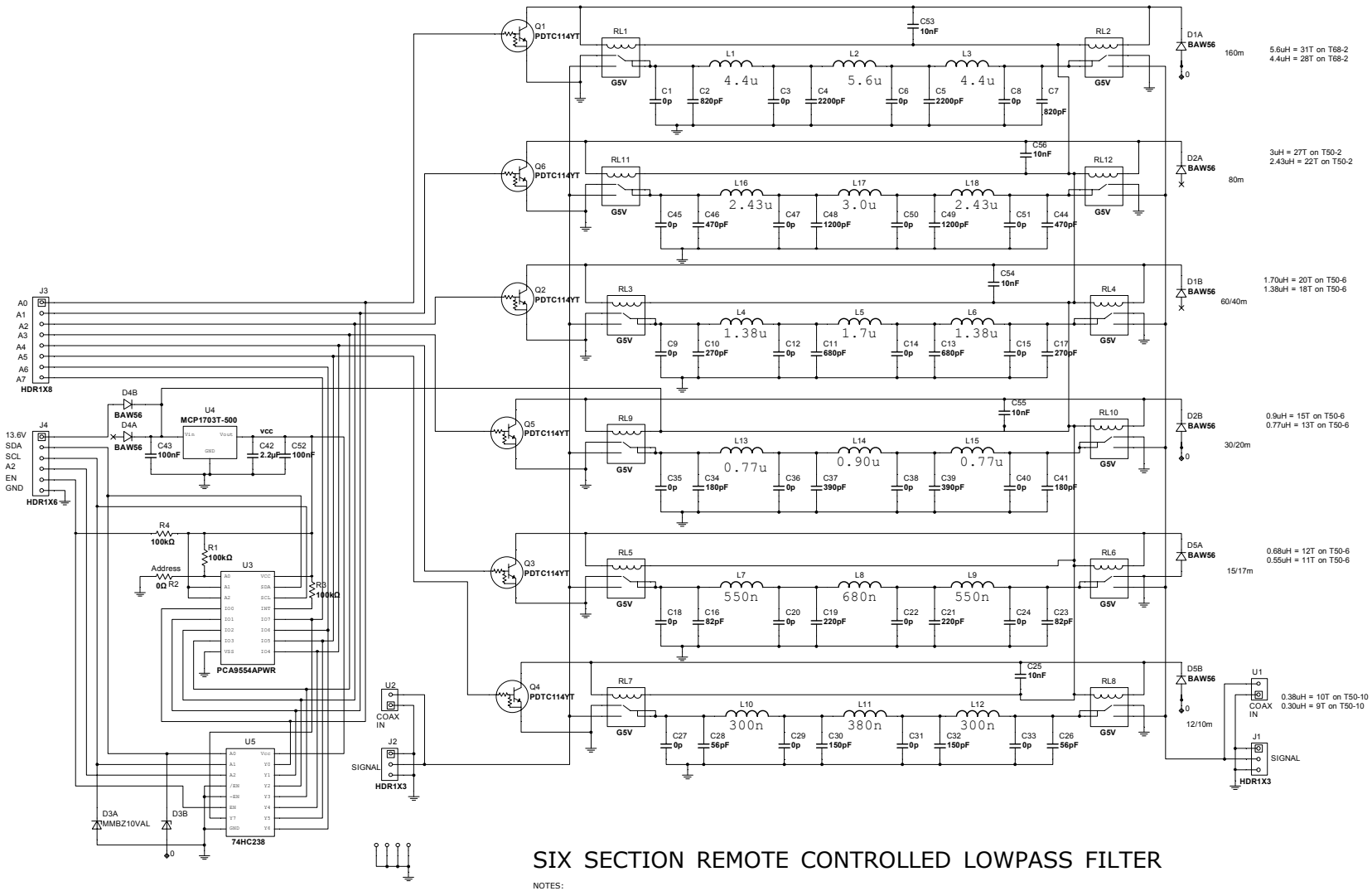

SIX SECTION REMOTE CONTROLLED LOWPASS FILTER

NOTES:
1. THREE OPTIONS FOR CONTROL - DIRECT LOGIC, I2C, 3/8 DECODE
2. COVERS 160M-10M WITH THESE VALUES
3. PARALLEL CAPACITORS ALLOW 1210/0805 SMD OR THRU-HOLE OPTION
4. MOUNTING HOLES DESIGNED TO FIT M0RZF POWER AMPLIFIER PCB
5. J1/J2 ARE THE SAME SPACING AS KITS & PARTS SINGLE BAND FILTER
6. PADS LABELLED "COAX" CAN ACCEPT RG316 SOLDERED DIRECTLY
7. FOR I2C PROGRAMMING SEE TEXAS PCA9554 DATASHEET
8. TWO SPARE DECODES ARE BROUGHT OUT AT A6+A7 TO ALLOW ADDITIONAL BANKS (E.G. 6M)
9. CAN USE T50 OR T68 TOROIDS, T68 RECOMMENDED FOR TOP BAND SECTION
10. INDUCTANCE VALUES SHOWN ARE "IDEAL", TURNS GIVEN ARE NEAREST TO THEORETICAL

Designed by Robert Brown, M0RZF 2014