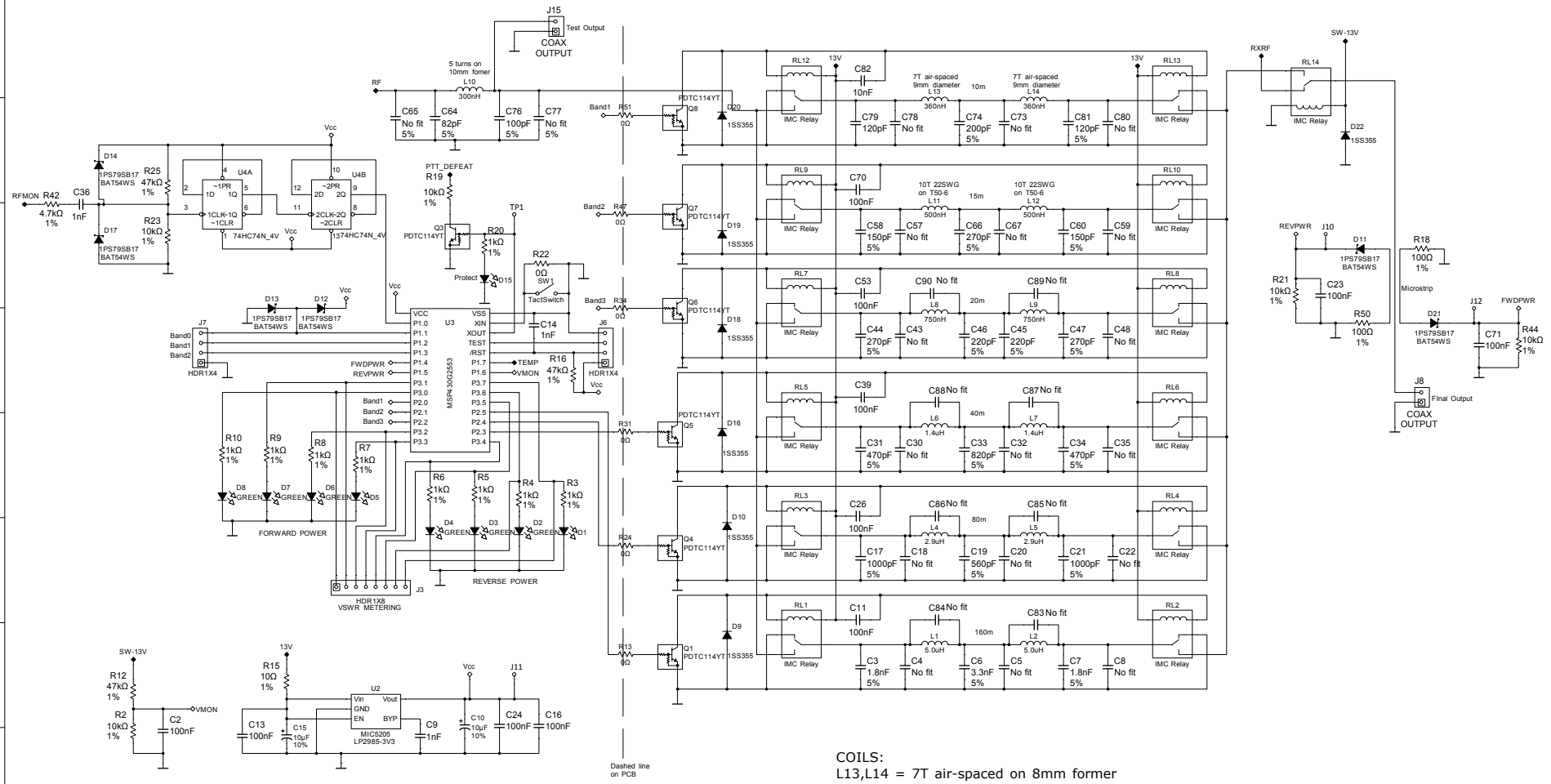

COILS:
L13,L14 = 7T air-spaced on 8mm former

TOROIDS:
L11,L12 = 10T 22 swg on T50-6
L8,L9 = 12T 22 swg on T50-6
L6,L7 = 18T 22 swg on T50-6
L4,L5 = 23T 22 swg on T50-2
L1,L2 = 29T 22 swg on T68-2

M0RZF 20/09/2016